MECHANICAL EDGE OF DOCK
SPECIFICATION SHEET

ALAPONT LOGISTICS SOLUTIONS USA

The Alapont Edge of Dock is the best option for loading and unloading goods in limited spaces where installing a conventional dock leveler is not possible. They do not require a pit; instead, they are installed at the edge of the dock platform, eliminating the need for civil works. This represents significant cost and production savings. Its easy installation and operation by the operator make it an economical and effective solution for loading and unloading goods at loading docks.

IDEAL APPLICATION
Best option for loading and unloading in small spaces where it is not possible to install a conventional leveling ramp.



STANDARD FEATURES

- **Requires minimal construction:** Only the installation of a metal angle if one is not already in place, making it less expensive than a conventional ramp.
- **Straightforward installation** and **simple operation** make it a cost-effective and efficient solution for loading and unloading goods.
- **Non-slip Surface**
- **79" wide,** accommodating almost any vehicle except vans.
- **Designed for easy maintenance.**

STANDARD CAPACITIES

25.000 Lbs

All standard models can be manufactured with all load capacities.

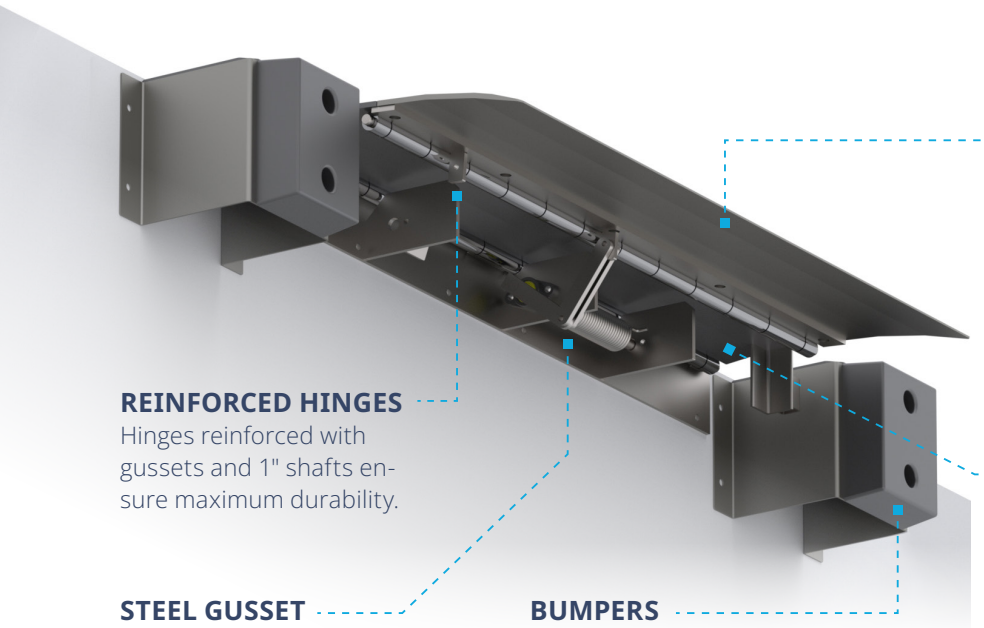

REINFORCED HINGES
Hinges reinforced with gussets and 1" shafts ensure maximum durability.

STEEL GUSSET
For structural support

ROBUST HINGED LIP
The lip is equipped with a front bevel and a 5° fold that allows for a smooth transition with the vehicle. The standard model features a 16" projection hinged lip, enabling it to bridge the gap and height differences between the loading docks and the vehicle beds to securely rest on the latter.

PLATFORM
Constructed of 3/4" diamond plate.



BUMPERS
The standard model includes two high-resistance rubber bumpers (10" x 20" x 3"), which protect the ramp by cushioning the impact of the truck against the building's wall.

APPLICATION

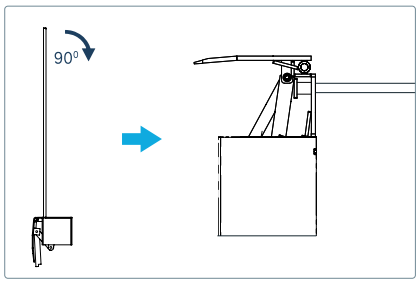

1 Insert the handle lever into the cavity located next to the platform and pull it backward. The platform will rise due to the action of the springs until it is in a vertical position and anchored by the locking bar.

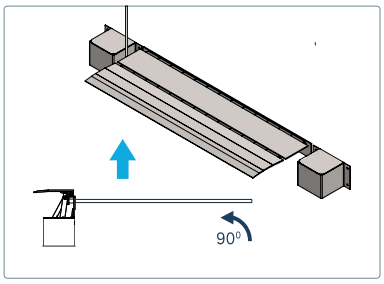

2 By pushing the handle lever forward, the platform descends and the lip automatically extends towards the vehicle.

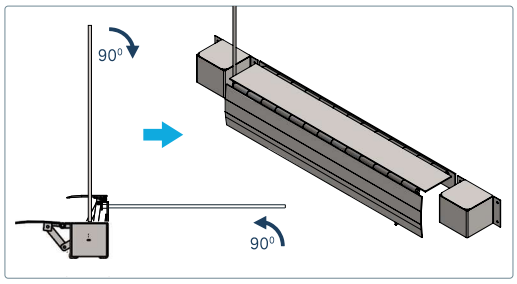

3 Pull the handle lever backward so that the platform rises due to the action of the springs until the locking bar slides in front of the anchor and can descend without issues. Subsequently, push the handle lever forward slowly, so the platform descends and the lip automatically folds back into its initial position.

TECHNICAL DATA

CONSTRUCTION

PLATFORM	• Constructed of 3/4” checkered steel plate. • Reinforced by 8 "U" profiles. • Hinges: reinforced with plates, ensure maximum strength.
LIP PLATE	• Made of 1/2” diamond plate. • Projection: 16”, 18”, 20” • Lip hinges: reinforced with plates and has a 1” shaft.

OPTIONAL EQUIPMENT

- **Steel** Faced **Dock Bumpers.**
- **6” Thick** Dock **Bumpers.**
- **Vertical Bumpers.**
- **Lip Keeper.**
- **Wheel Guides**
- **Safety Wheel chocks.**
- For facilities that handle vans or vehicles narrower than 79", Alapont Logistics provides customization services to reduce the width to as little as 63", enabling access for smaller vehicles.
- **Available lip size:** 16", 18", 20".
- **Available lip typology options:**
  1. Chamfer: The lip narrows towards the tip.
  2. Segmented lip: The lip is segmented into multiple parts to adapt to the width of the different vehicles being operated.
- **Other finishing options:**
  1. Lacquered:
     - Gray RAL 7011
     - Blue RAL 5010
  2. Stainless steel.
  3. Hot dip galvanized.
  4. Zinc powder primer:
     - Black RAL 9005
     - Gray RAL 7011
     - Blue RAL 5010

EDGE OF DOCK DRAWINGS

Working Range	+5/-4 inches
Dock Width	72"
Total Projection (platform + lip)	27"
Total Width (dock + bumpers)	110"
Rubber Bumper Dimensions:	9" x 19" x 3"

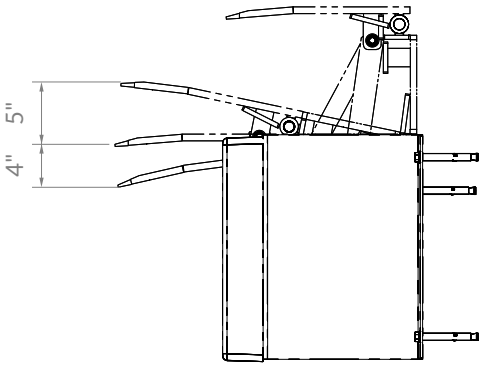

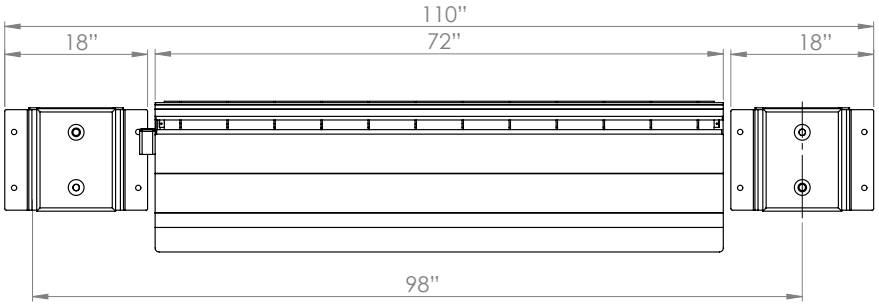

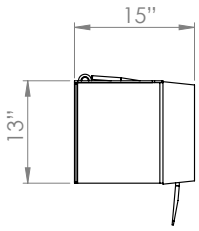

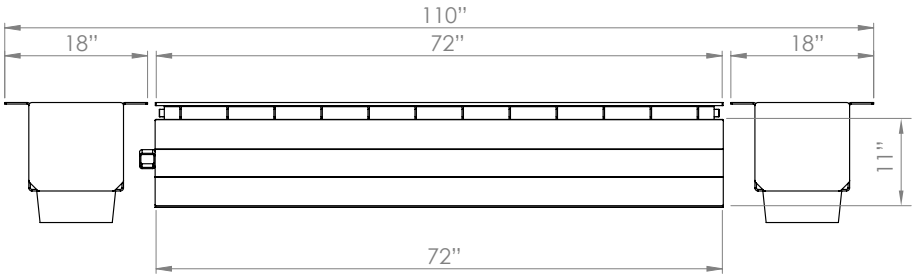

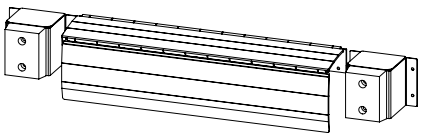

BASIC INSTALLATION REQUIREMENTS

- **It is essential to place a metal angle** at the edge of the concrete to weld the base of the **Edge of Dock to it.**
- **The width** of the angle must be **at least equal to the width of the Edge of Dock** being installed.

